Surge Arrestor - 400W

Broadband 50 Ω RF Surge Protection Device for Communication Systems

Product Overview

The TT-RF-SA-017 RF Surge Arrestor is a broadband coaxial surge protection device engineered for high-frequency RF systems requiring reliable transient suppression and electromagnetic surge immunity. The unit is designed for inline coaxial integration, providing low insertion loss, stable impedance characteristics, and effective transient voltage diversion to ground. It is optimized for amateur radio installations, RF laboratories, communication infrastructure, and sensitive RF front-end protection in both fixed and portable systems.

Application Domains

Amateur (HAM) radio systems, VHF/UHF communication infrastructure, RF base stations, radar and RF protection systems, RF laboratories, and coaxial feeder line surge protection installations.

Product Identification

Part Number	TT-RF-SA-017
Description	RF Surge Arrestor, 50 Ω, Broadband RF Surge Protection Device
Device Category	Inline Coaxial RF Surge Protection Module

Electrical Specifications

Characteristic Impedance	50 Ω
Frequency Range	Broadband RF operation (HF to UHF band support)
Insertion Loss	Low-loss RF path (typical < 0.1 dB)
VSWR	1.0 - 1.02
Surge Protection Mechanism	Gas discharge tube / transient diversion topology
Response Time	< 25ns transient suppression
Max Capacitance	< 1.5pF
Voltage Protection level	<= 800V
Impulse Spark Over Voltage	1200V
Impulse Discharge Current	5000A
Power Handling	

SWR	Max Power
1.0 - 2.0	450 W
2.1 - 3.0	300 W
3.1 - 4.0	200 W
>4.1	50 W

Environmental and Mechanical Characteristics

Connector Type	SO-239 (M-Female) to SO-239 (M-Female)
Housing Material	Al(6061)
Mounting Configuration	Inline coaxial installation
Environmental Protection	Corrosion resistant
Operating Temperature	-40°C to +80°C
Ingress Protection	IP 66

Standard Status

Surge Immunity	IEC 61000-4-5 Compliant
Declaration of Conformity	ROHS, CE

Product Visuals

Figure 1: Front View

Figure 2: Side View

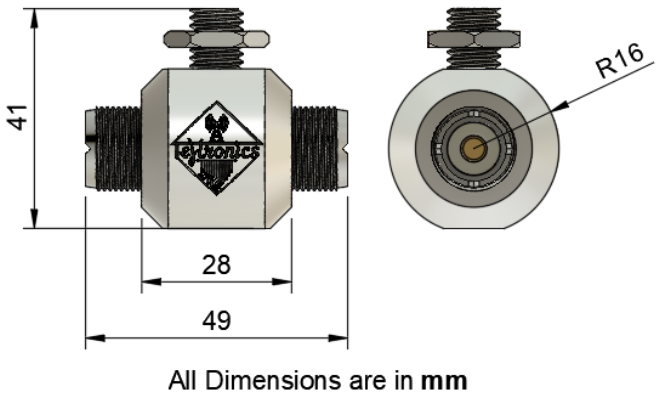

Figure 3: Dimension Drawing

RF Performance

Figure 4: Insertion Loss vs Frequency

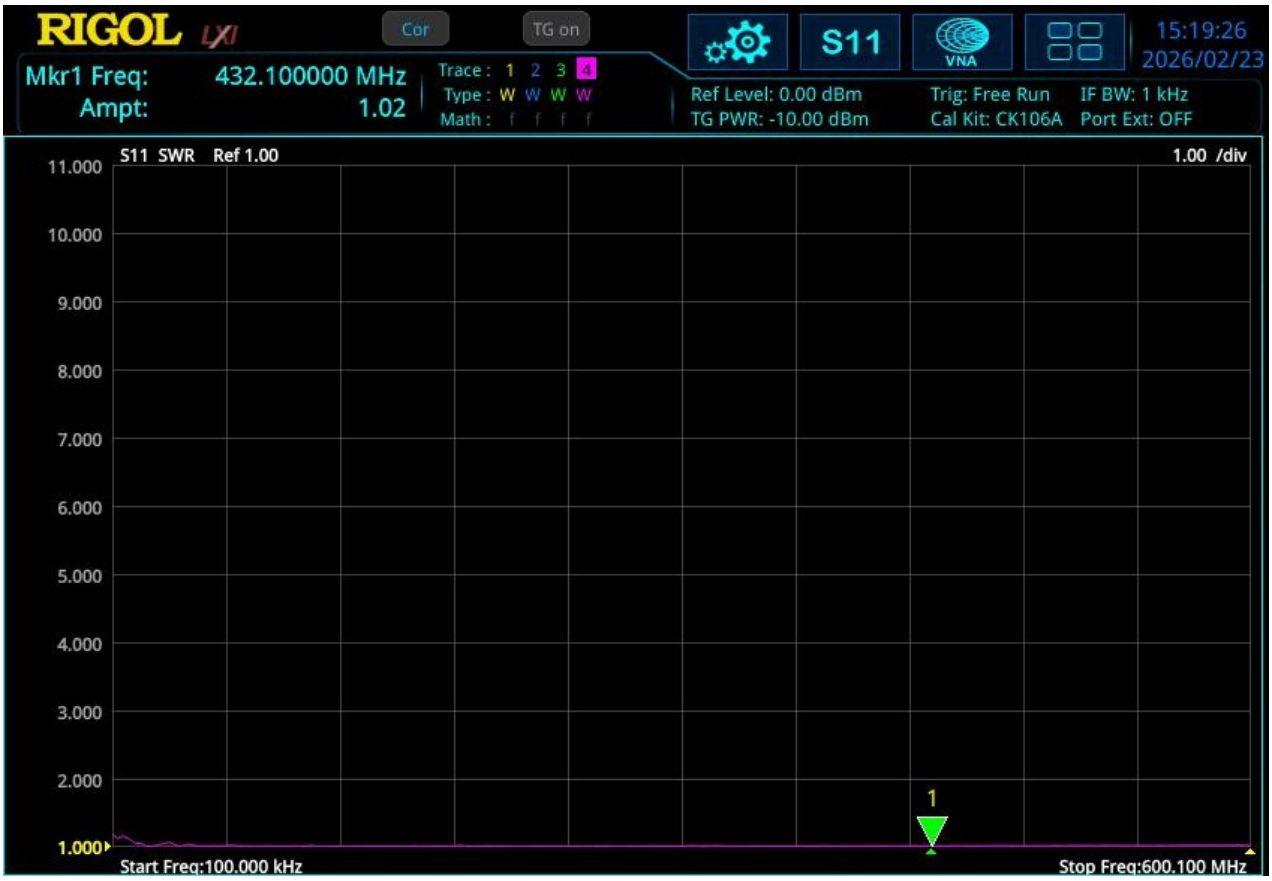

Figure 5: Standing Wave Ratio (SWR) vs Frequency

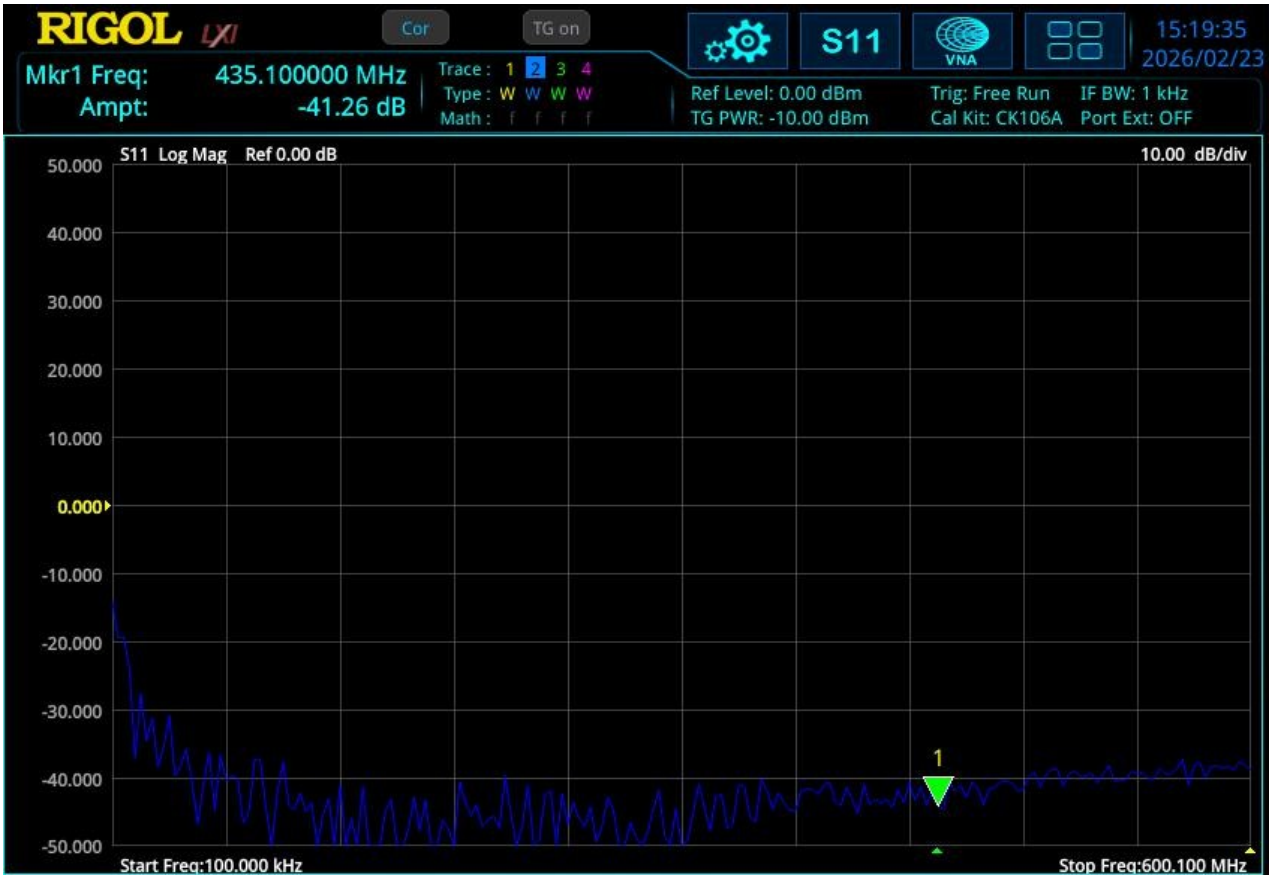

Figure 6: Return Loss vs Frequency